ESBE

www.esbe.eu



SERIES VTC300/VTC400

ESBE

NO.1 IN HYDRONIC SYSTEM CONTROL

Mtrl.nr: 9814 02 86 • Ritn.nr: 9143 utg. D • Rev. 1511

Series VTC311
Series VTC312
Series VTC317
Series VTC318
Series VTC412
Series VTC422

CE

PED 2014/68/EU, article 4.3

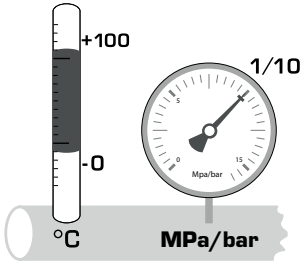



VTC310



VTC410



VTC420

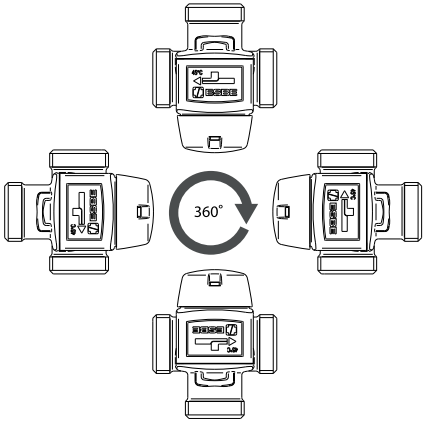

45/50/55/60/65/70/80 °C

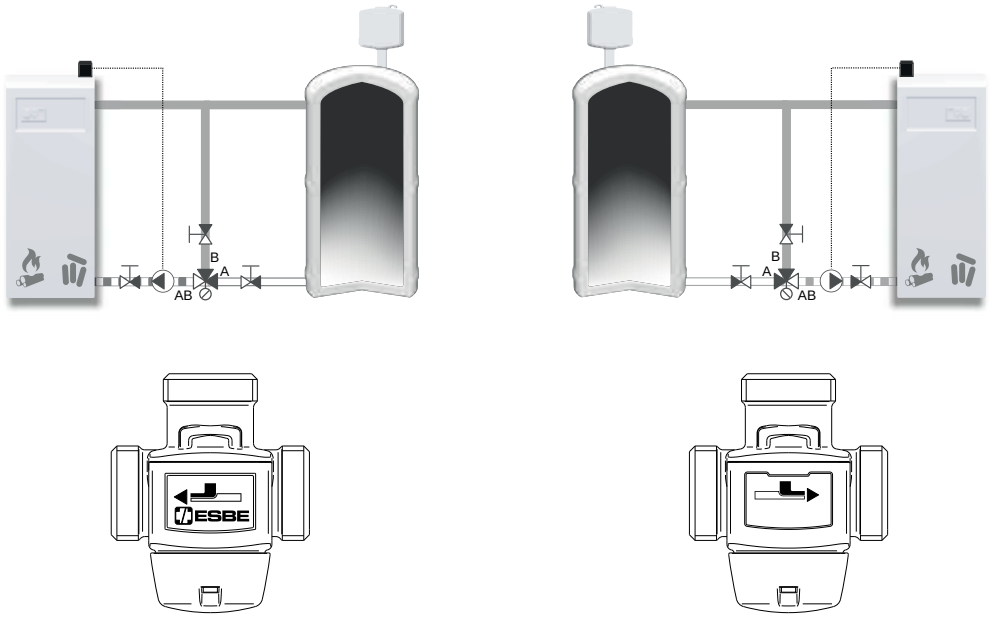

70/80 °C

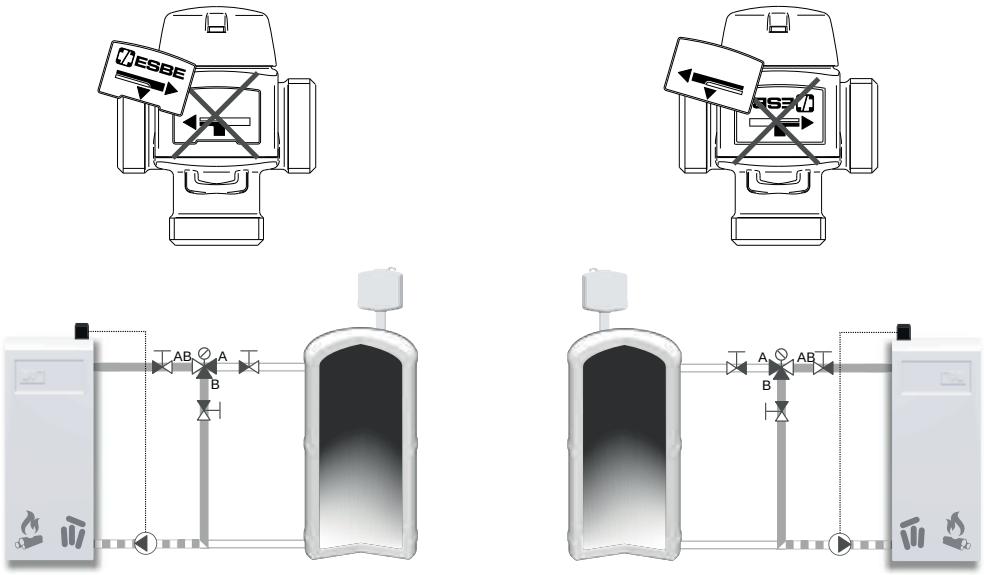

VTC300/VTC400

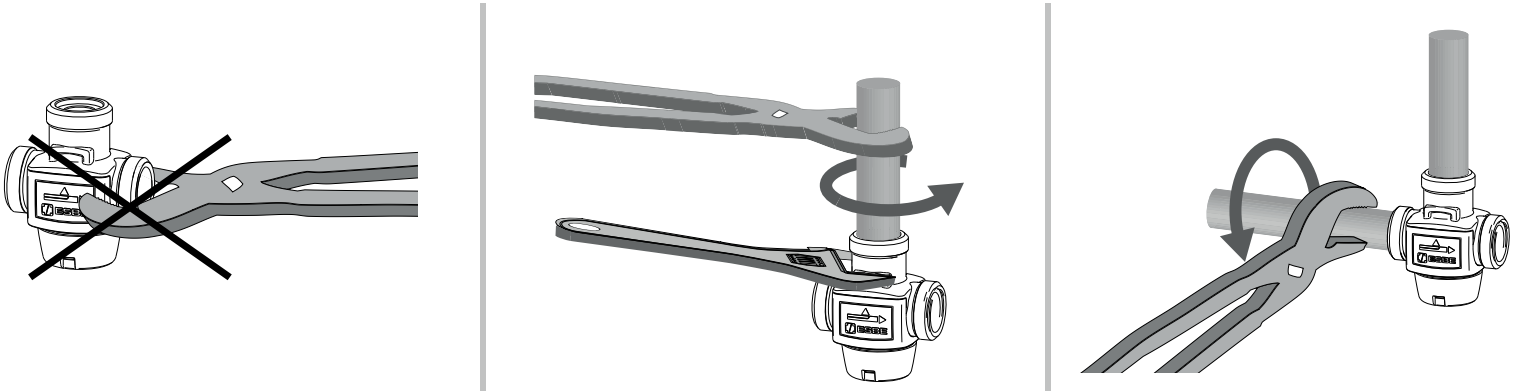

VTC420

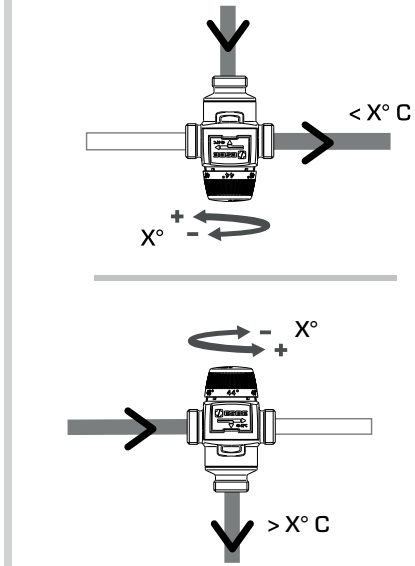

1

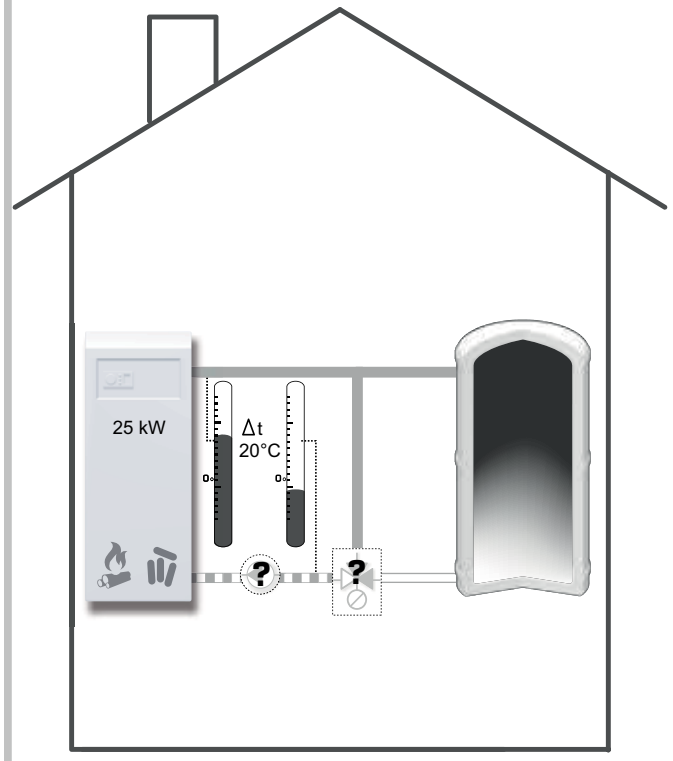
25 kW
Δt
20°C
?
?

2

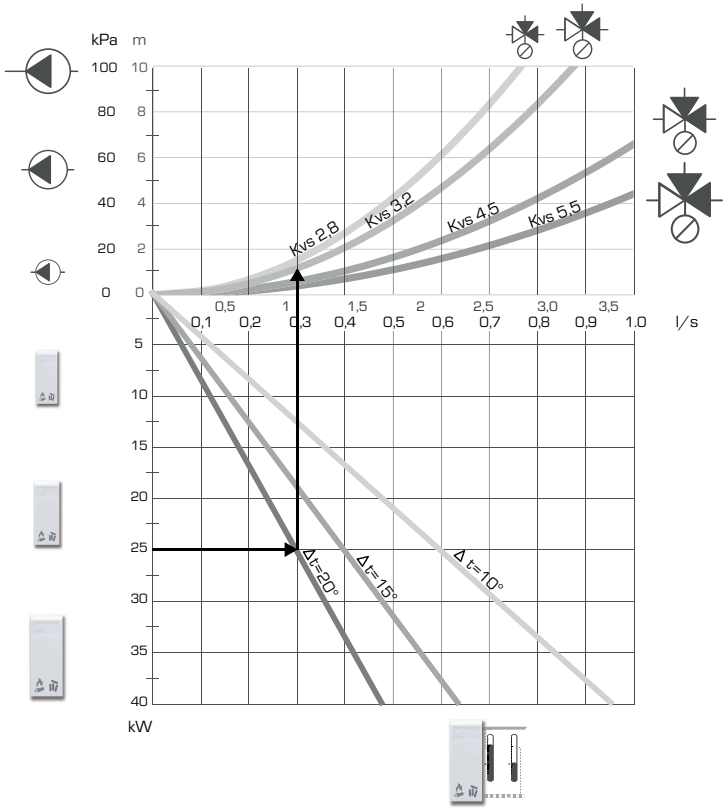
kPa
m
100
10
80
8
60
6
40
4
20
2
0
0
Kvs 2,8
Kvs 3,2
Kvs 4,5
Kvs 5,5
0,5
1
1,5
2
2,5
3,0
3,5
0,1
0,2
0,3
0,4
0,5
0,6
0,7
0,8
0,9
1.0
l/s
5
10
15
20
25
30
35
40
kW
Δt=20°
Δt=15°
Δt=10°

3

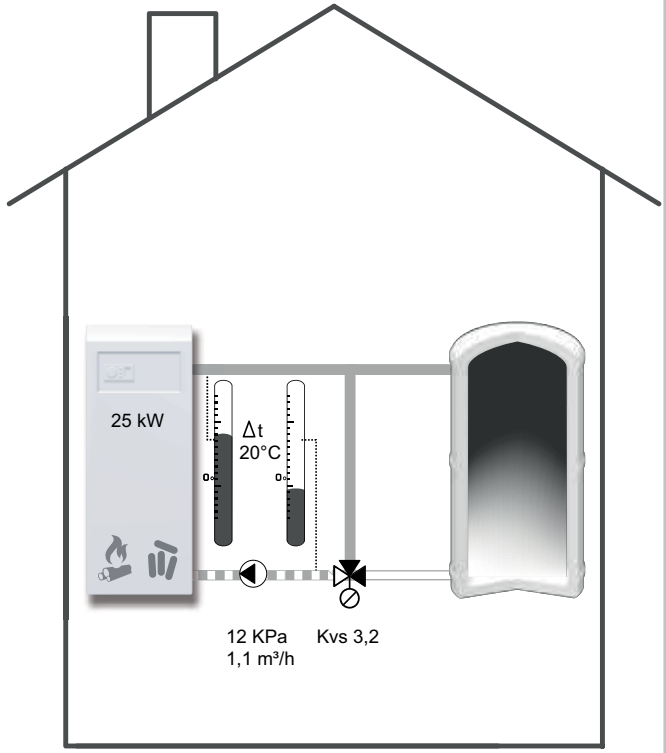
25 kW
Δt
20°C
12 KPa
1,1 m³/h
Kvs 3,2

VTC300

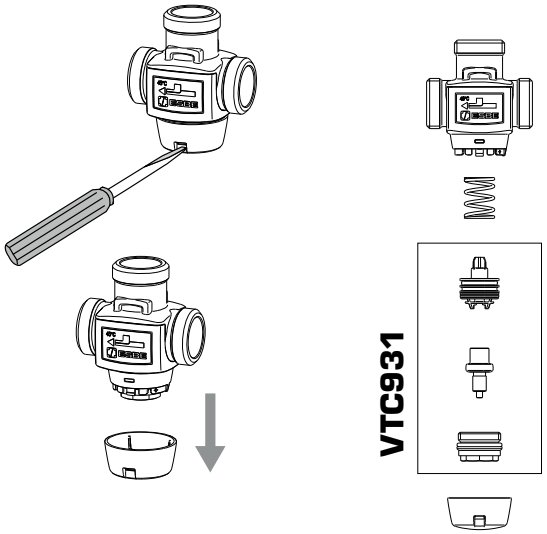

VTC410

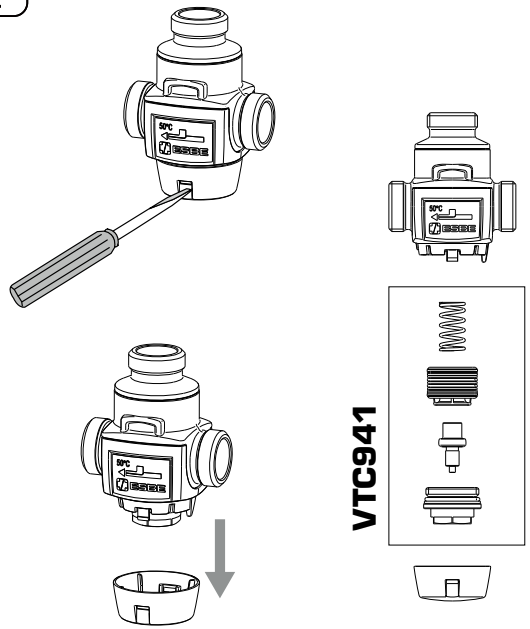

VTC420

