ESBE
SERIES ARA600 2-Point

Series ARA6x5
Series ARA6x6
Series ARA6x7
Series ARA6x8

CE

LVD 2014/35/EU
EMC 2014/30/EU
RoHS 2011/65/EU

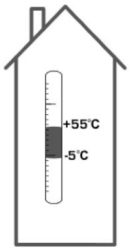

1

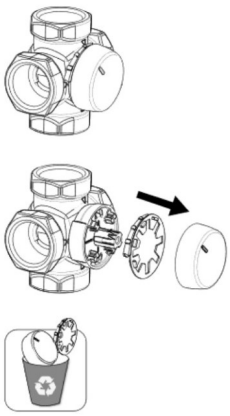

2

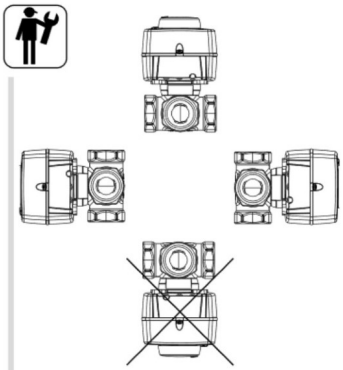

3

Series MG, G, F, H, HG, BIV, T, TM

3MG, 4MG	DN15-25	
3G, 4G	DN20-40	
	DN50	
3F, 4F ≤ DN50	DN20-25	
	DN32-50	
3HG, 4HG, 3H, 4H	H: DN25	
	H: DN32-50	
	HG: DN25	
BIV	DN20-22	
	DN25	
T, TM	T: DN20-32	
	TM: DN20	

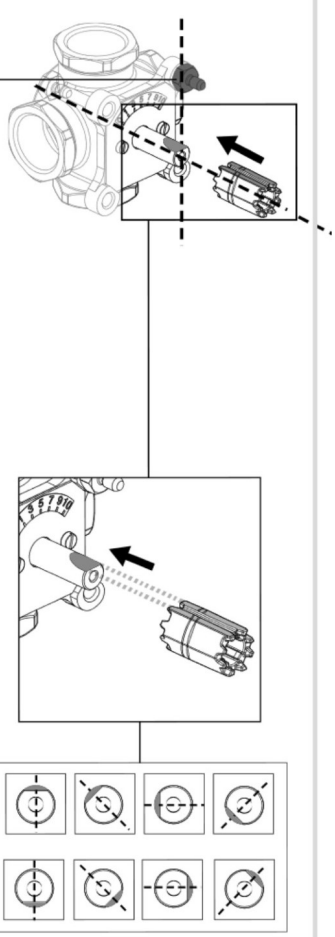

i



+



Series VRGxxx, VRBxxx, VRHxxx

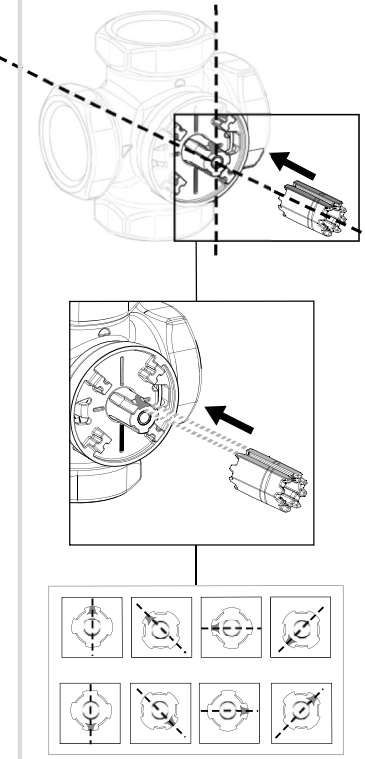

Series VRCxxx

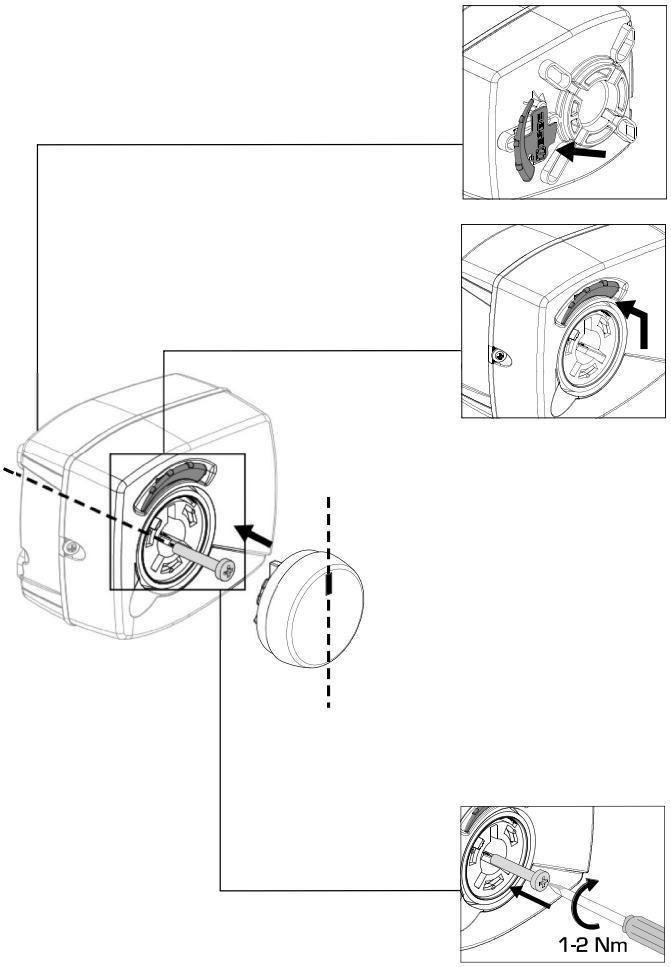

ESBE
www.esbe.eu

Mat.nr: 9814 02 74 • Rin.nr: 8080 Vers. G • Rev.1909



SERIES ARA600 2-Point

ESBE

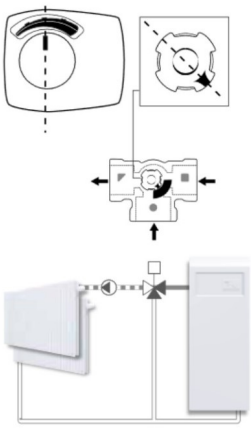

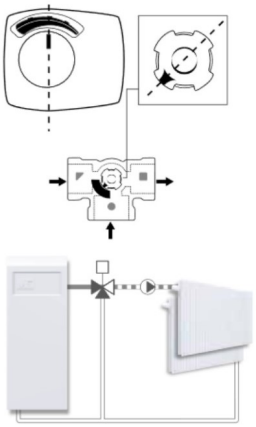

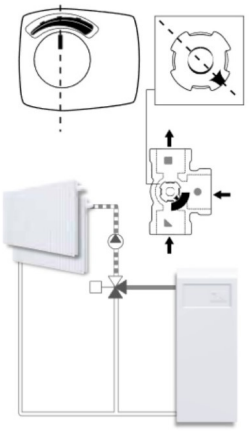

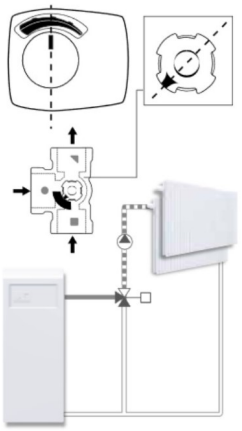

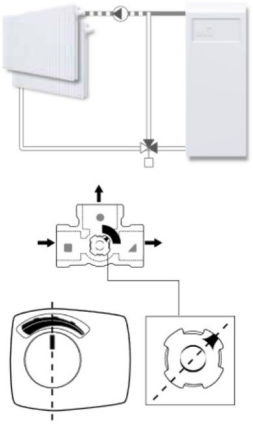

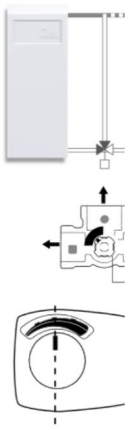

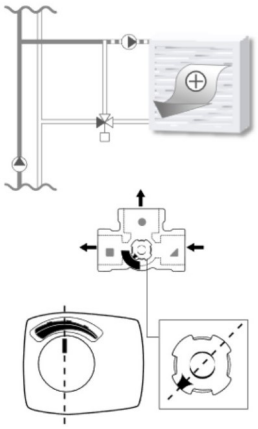

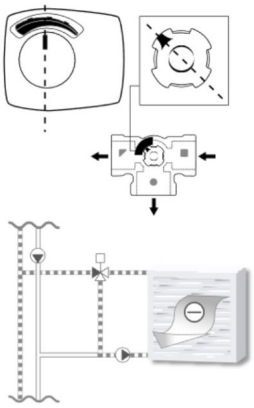

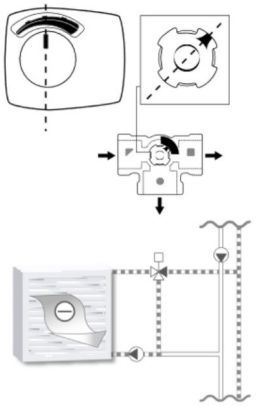

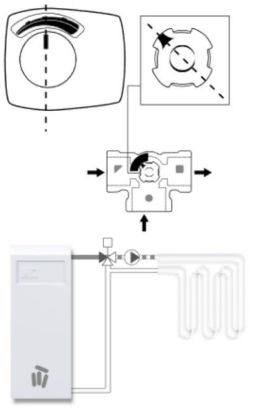

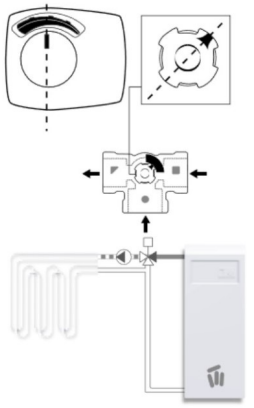

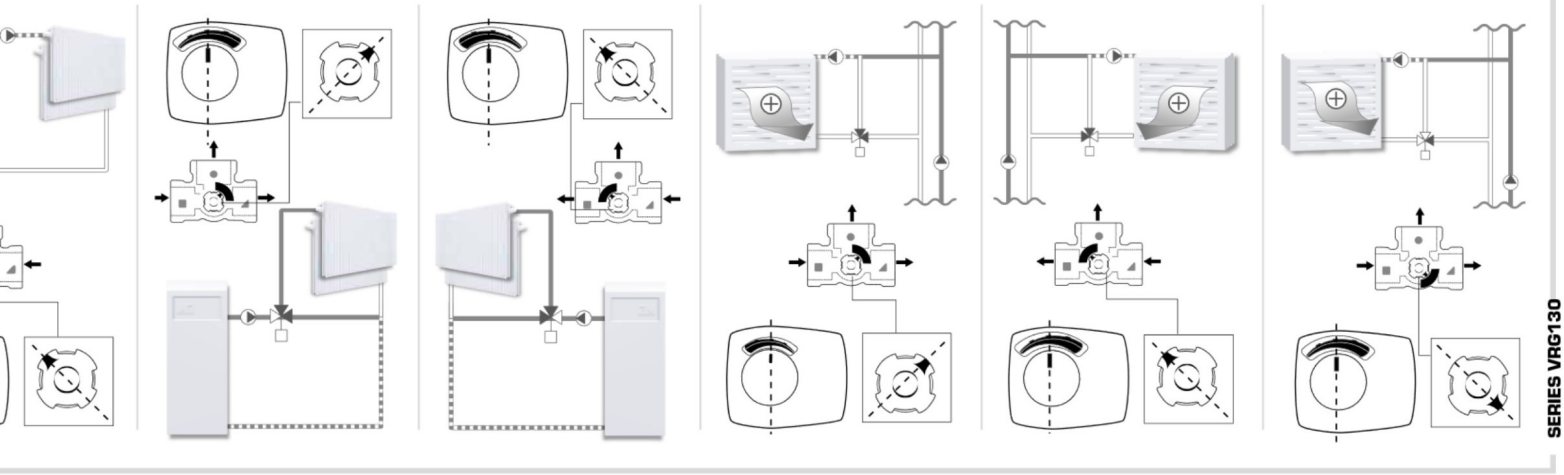

SERIES VRG130

SERIES VRG140

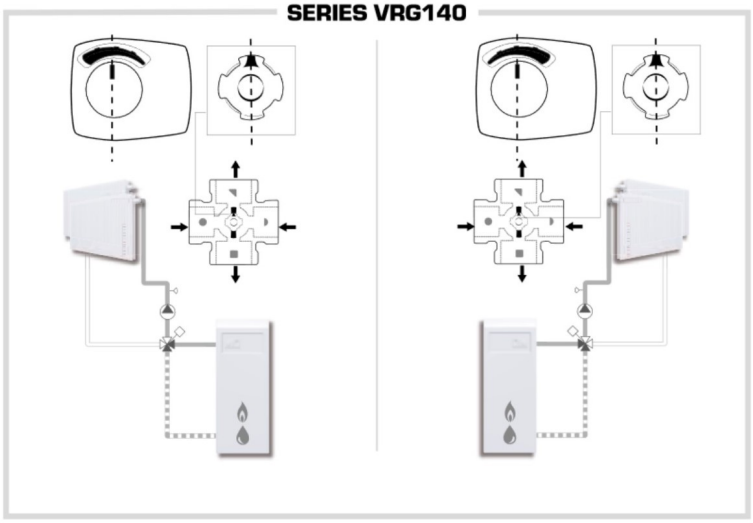

Piping Schematics are General Representations

SERIES VRG230

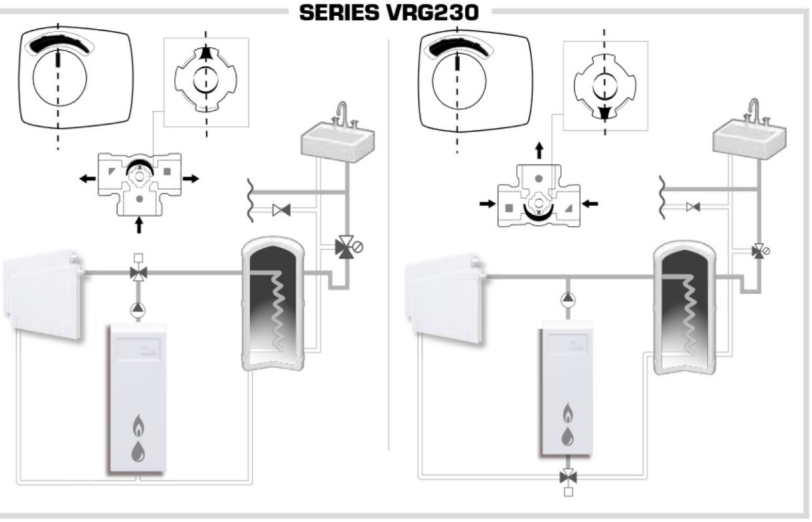

SERIES VRH130

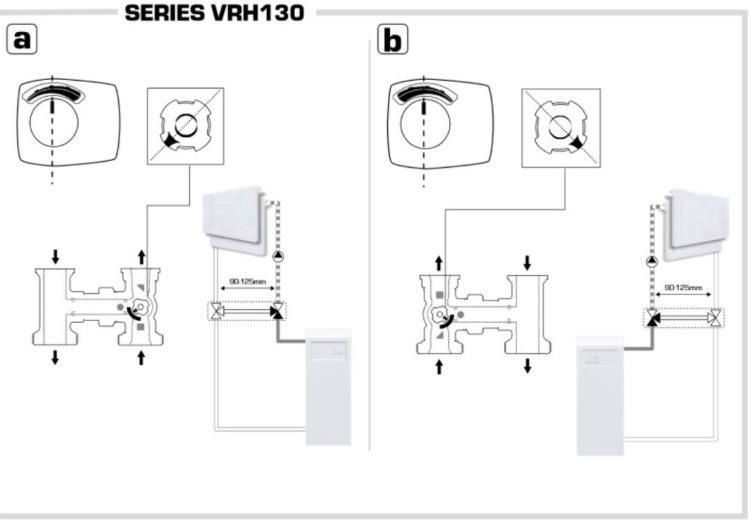

SERIES VRG330

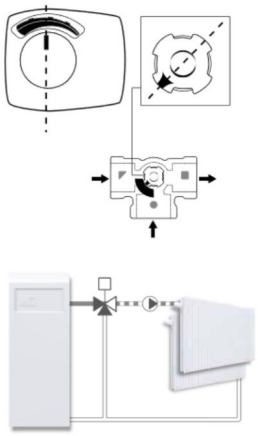

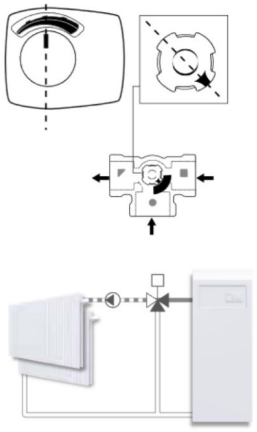

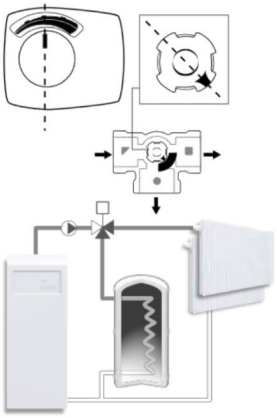

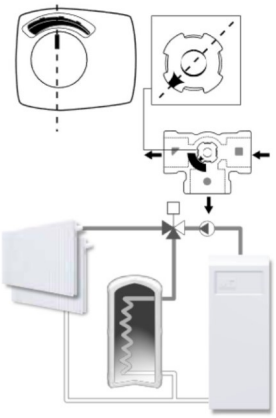

SERIES VRC160

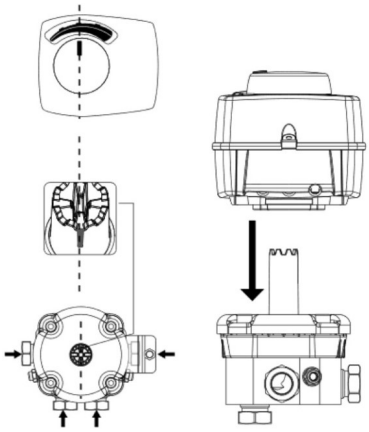

SERIES ARA636, ARA638, ARA646, ARA648, ARA656, ARA658

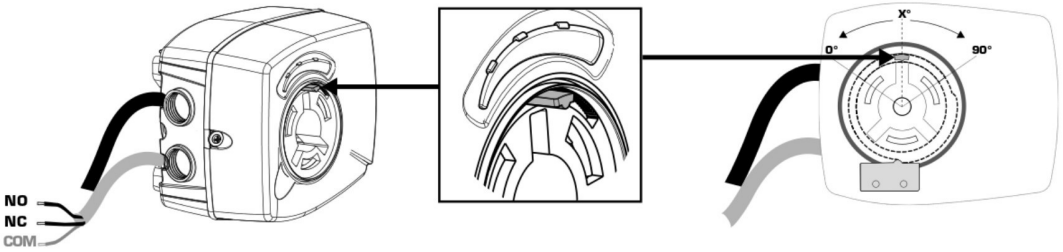

	0°–(90°–x°)	(90°–x°)–90°
NO		
NC		
	X° = 45°	

Series ARA635, ARA637, ARA645, ARA647, ARA655, ARA657

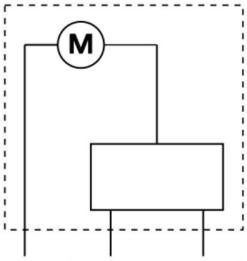

2points	N bu	Y bk	L bn
3points	N bu	CCW bk	CW bn

Series ARA636, ARA638, ARA646, ARA648, ARA656, ARA658

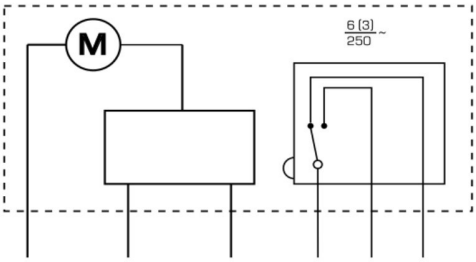

2points	N bu	Y bk	L bn	C wh	NO rd	NC og
3points	N bu	CCW bk	CW bn	C wh	NO rd	NC og

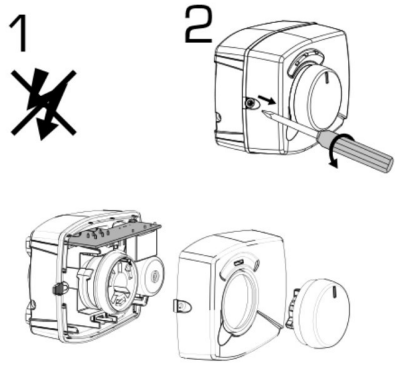

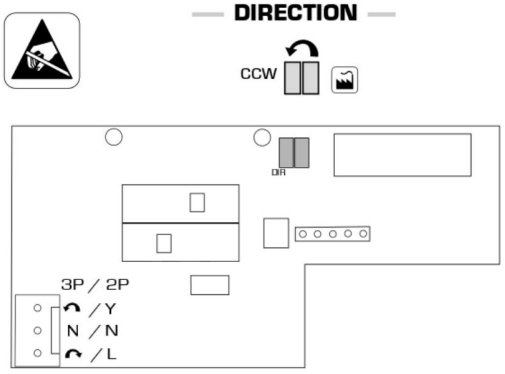

DIRECTION 2-POINT

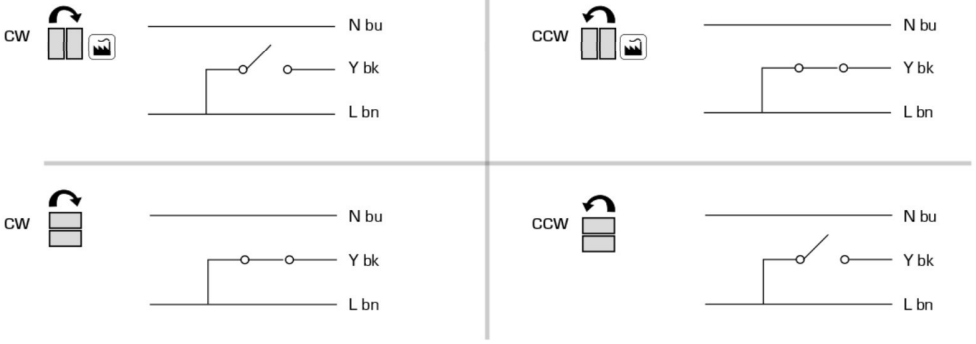

DIRECTION 3-POINT



