ENGINEERING
TOMORROW

Installation Guide

Danfoss Redia® M30 x 1,5 / 015G3338
015G3339

Danfoss Redia® M30 x 1,5
thermostatic sensors series





Installation | Montage | Installation | Instalación

1.

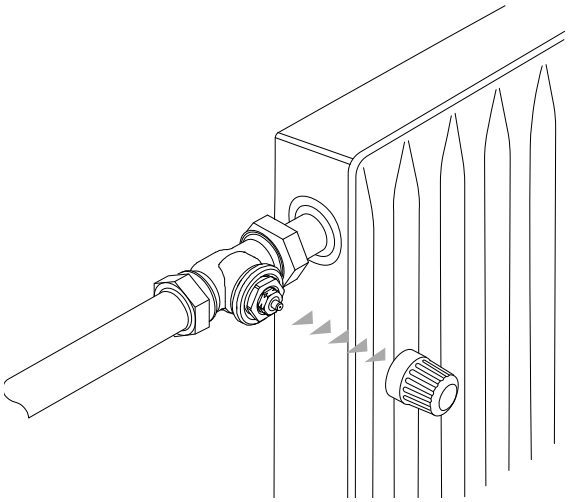

2.

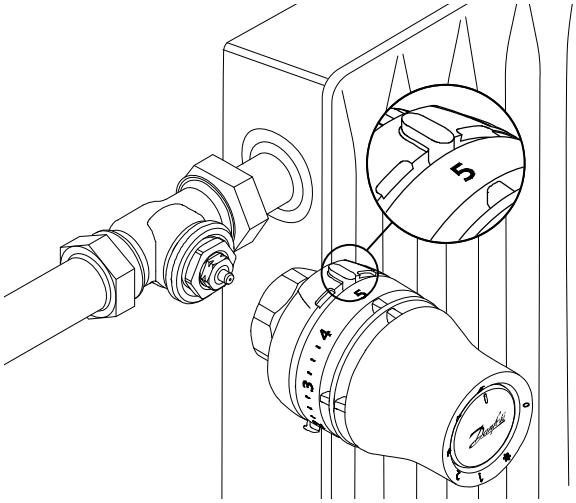

3.

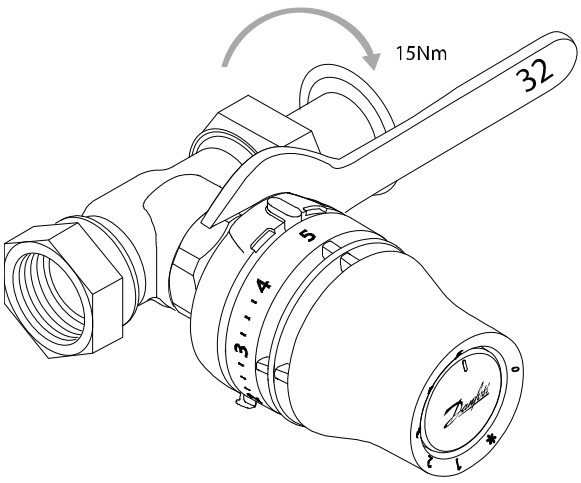

© Danfoss Climate Solutions | 2023.03

BIV Installation | Montage | Installation | Instalación

1.

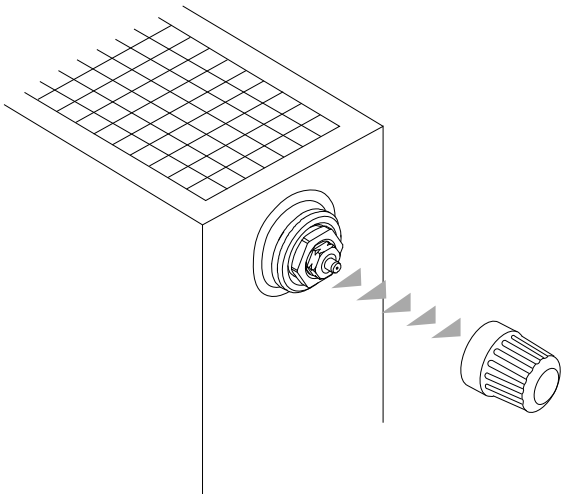

2.

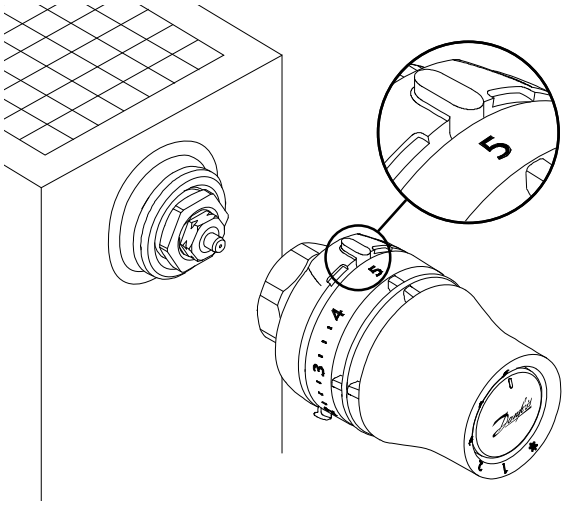

3.

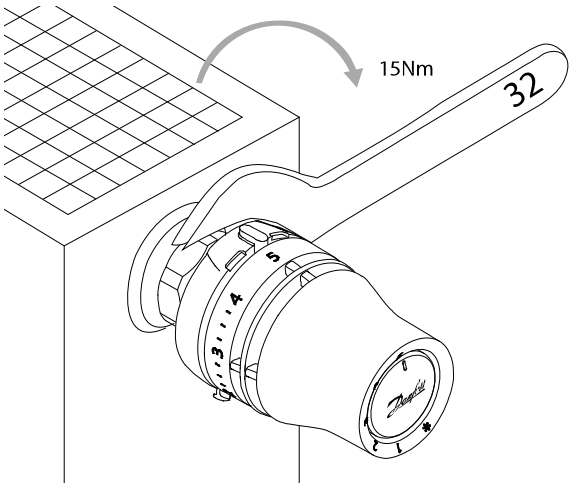

Temperature Limitation | Temperaturbegrenzung | Limite de température | Limitación de temperatura (MAXIMUM)

1.

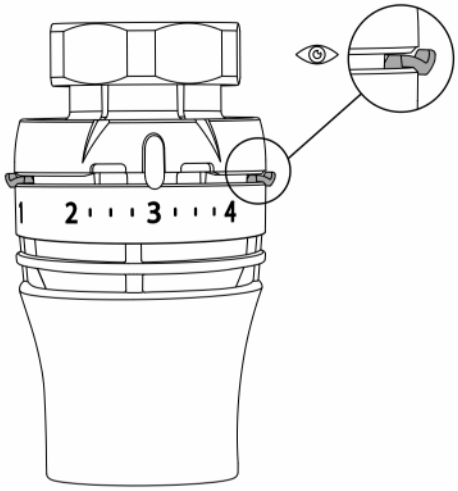

2.

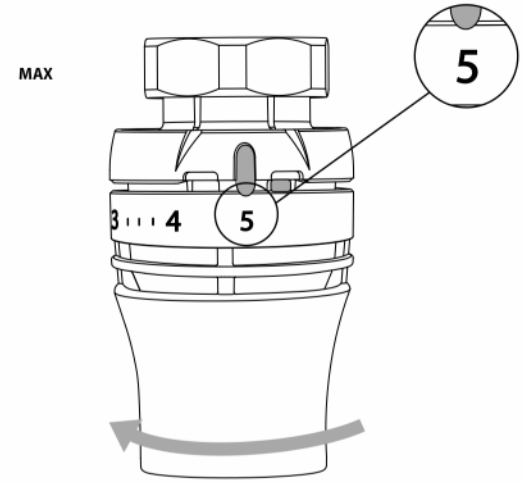

3.

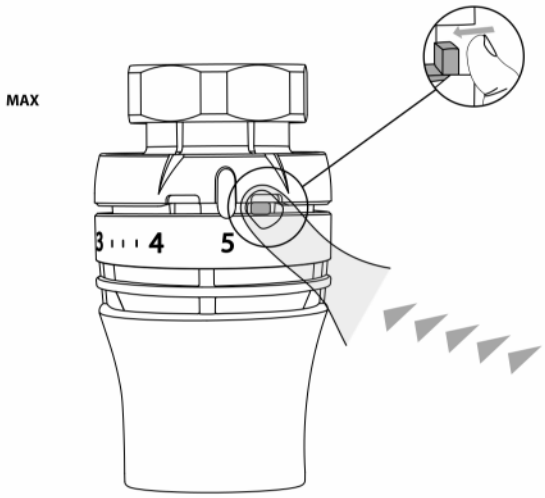

4.

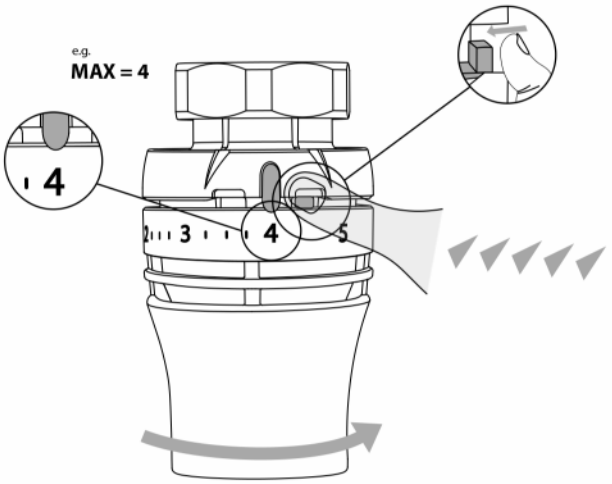

5.

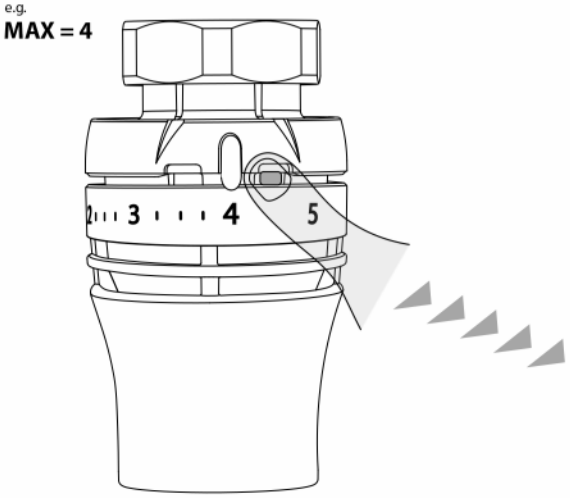

© Danfoss Climate Solutions | 2023.03 | 3

Temperature Limitation | Temperaturbegrenzung | Limite de température | Limitación de temperatura (MINIMUM)

1.

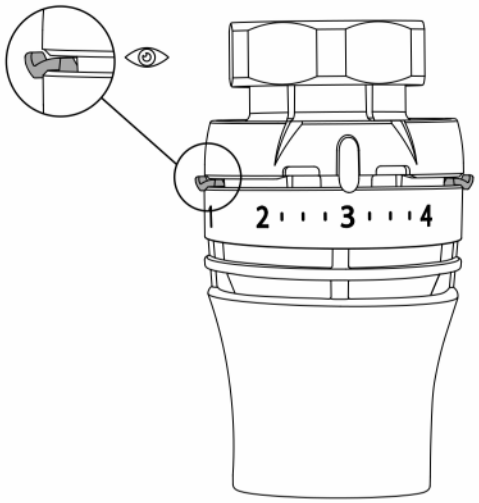

2.

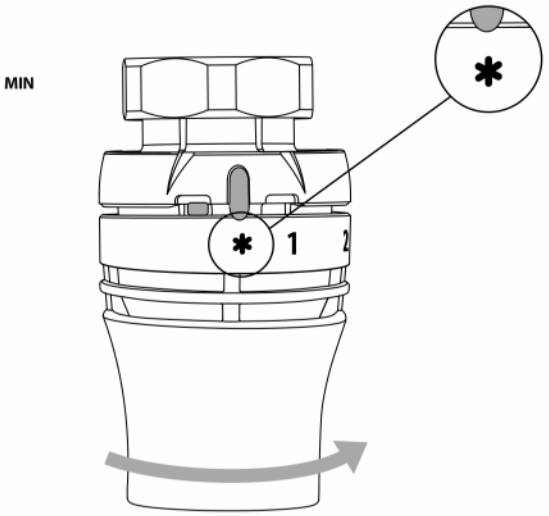

3.

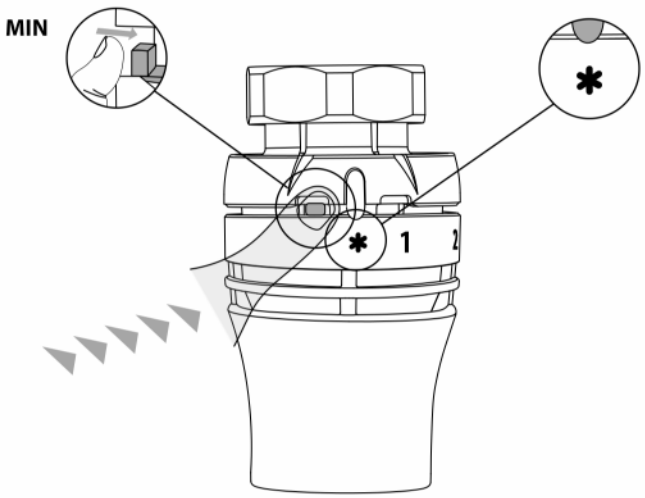

4.

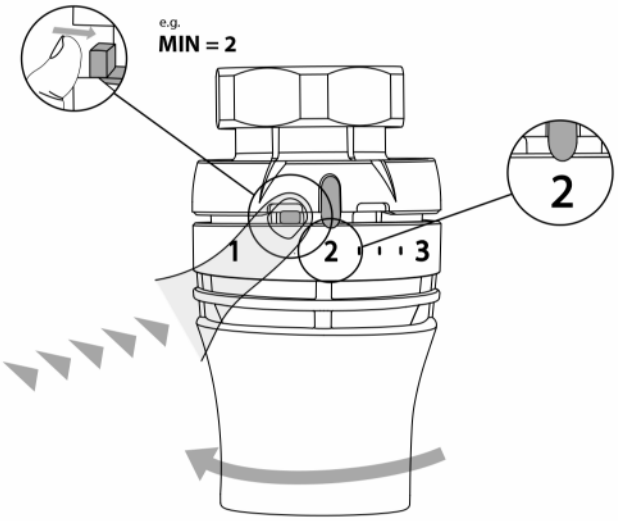

5.

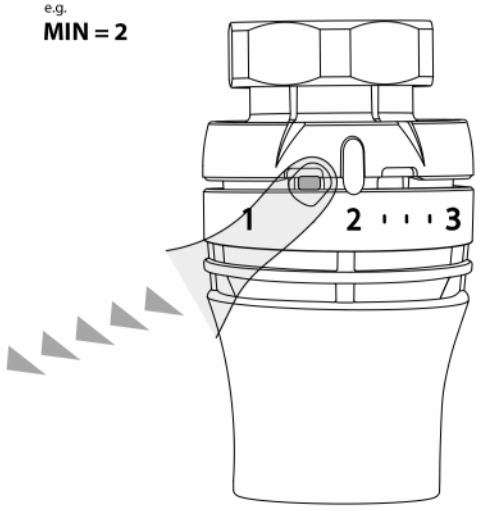

Shut off | Abschließen | Couper | Cerrar	
1. 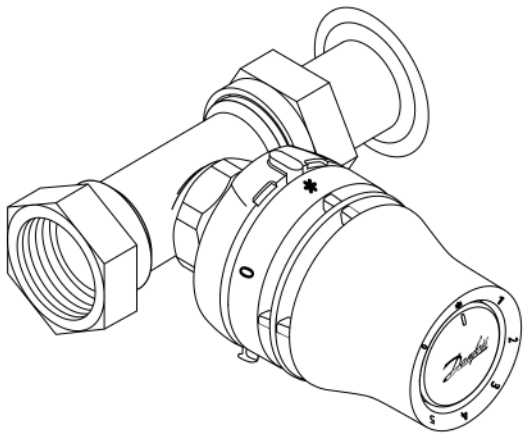	**2.** 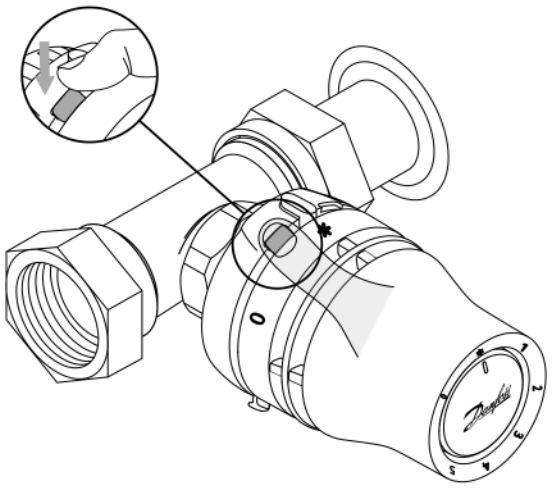
3. 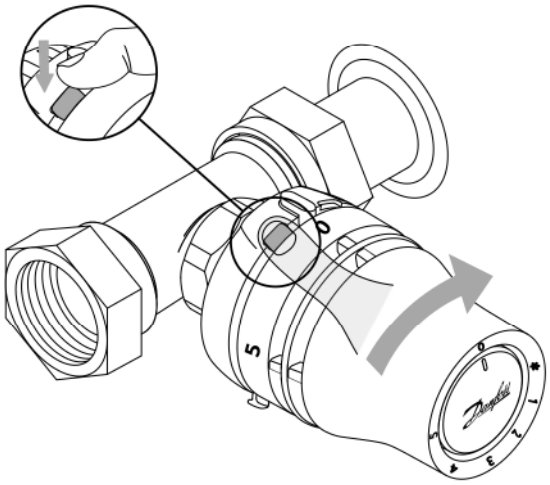	

© Danfoss Climate Solutions | 2023.03 | 5

Danfoss Redia® M30 x 1,5

Theft protection | Diebstahlschutz |Protection contre le vol | Protección contra robo

1.

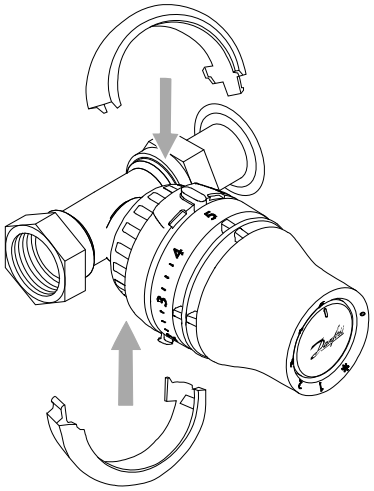

2.

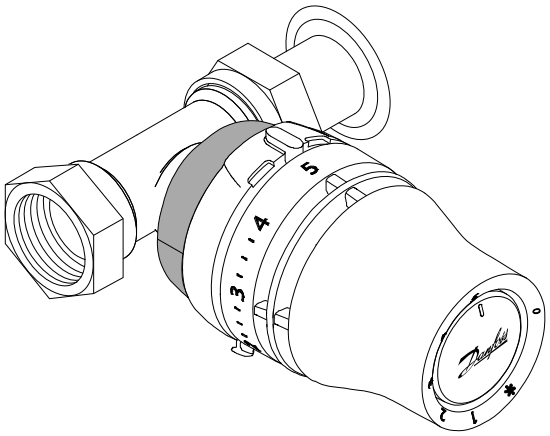

	Code no.
	013G5287

Blind mark | Blinde markierung | Marque aveugle | Marca ciega

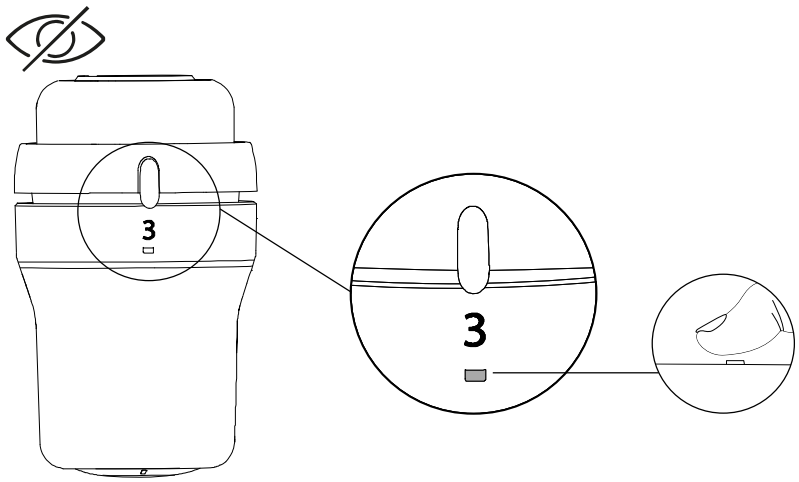

Danfoss A/S
Climate Solutions • danfoss.com • +45 7488 2222

Any information, including, but not limited to information on selection of product, its application or use, product design, weight, dimensions, capacity or any other technical data in product manuals, catalogues descriptions, advertisements, etc. and whether made available in writing, orally, electronically, online or via download, shall be considered informative, and is only binding if and to the extent, explicit reference is made in a quotation or order confirmation. Danfoss cannot accept any responsibility for possible errors in catalogues, brochures, videos and other material.
Danfoss reserves the right to alter its products without notice. This also applies to products ordered but not delivered provided that such alterations can be made without changes to form, fit or function of the product.
All trademarks in this material are property of Danfoss A/S or Danfoss group companies. Danfoss and the Danfoss logo are trademarks of Danfoss A/S. All rights reserved.