Data sheet

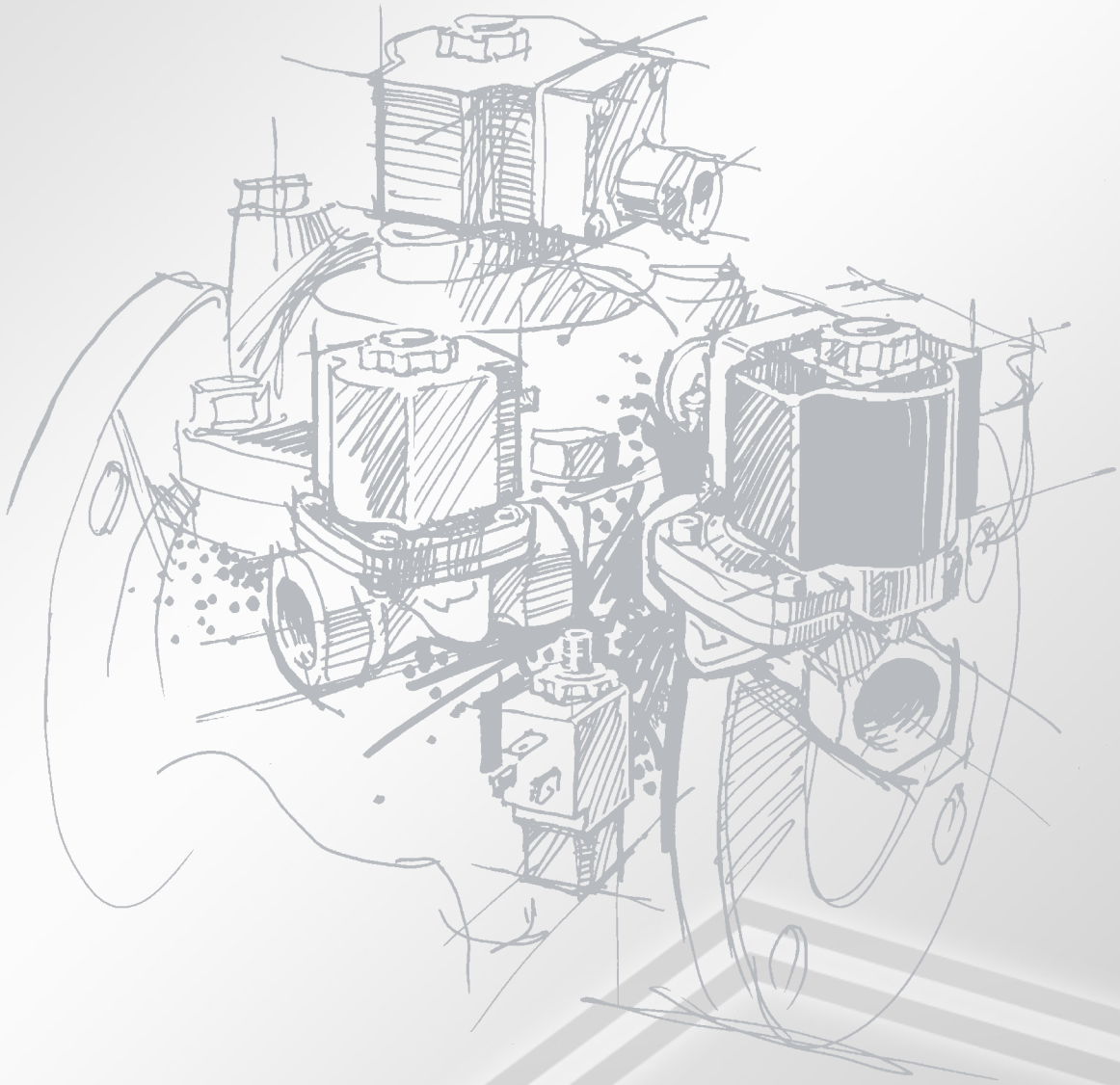

Solenoid valves
2/2-way assisted lift operated
Type EV250B

February 2003

DKACV.PD.200.L1.22
520B1497

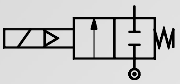

De-energized
closed

Type EV250B NC
for neutral liquids and gases
DN 10 - 22 BD

$^3/_8$ in. - 1in.

Features

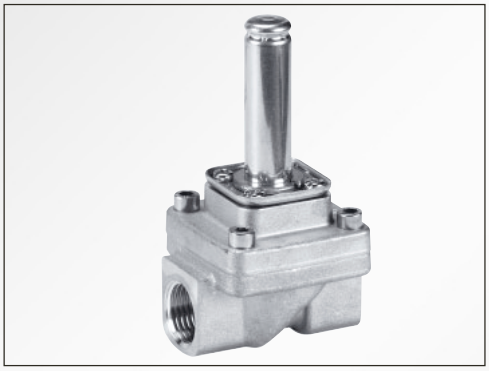

- For heating systems and other systems with low and strongly fluctuating pressure conditions
- For water, oil, compressed air and similar neutral media
- C_v value: Up to 8.1 gal/min
- Differential pressure: Up to 145 psi
- Viscosity: Up to 50 cSt
- Ambient temperature: Up to 140°F
- Media temperature from –22 to 248°F
- Coil enclosure: Up to IP 67
- Thread connections: From $^3/_8$ to 1in. NPT

Technical data

Main type	EV250B 10BD	EV250B 12BD	EV250B 18BD	EV250B 22BD
Pressure range	See Ordering (page 3)			
Max. test pressure	367 PSI			
Time to open[1])	100 ms	100 ms	150 ms	150 ms
Time to close[1])	100 ms	100 ms	100 ms	100 ms
Ambient temperature	Max. +176°F (depending on coil type, see data for the coil selected)			
Media temperature	EPDM: +22°F - +248°F: 0 - 145 Psi FKM: 32°F - +212°F (water: Max. +140°F)			
Viscosity	max. 50 cSt			
Materials	Valve body: DZR brass[2]), CuZn36Pb2As/CZ132 Cover: Brass W.no. 2.0402 Armature: Stainless steel, W.no. 1.4105/AISI 430 FR Armature tube: Stainless steel, W.no. 1.4306/AISI 304 L Armature stop: Stainless steel, W.no. 1.4105/AISI 430 FR Springs: Stainless steel, W.no. 1.4310/AISI 301 O-rings: EPDM or FKM Valve plate: EPDM or FKM Diaphragm: EPDM or FKM			

[1]) The times are indicative and apply to water. The exact times will depend on the pressure conditions.
[2]) Dezincification resistant brass

Dimensions and weight

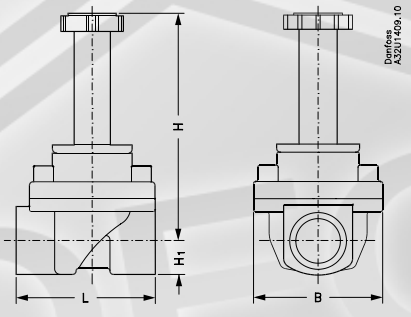

Type	L		B		H_1		H		Weight without coil	
	[in.]	[mm]	[in.]	[mm]	[in.]	[mm]	[in.]	[mm]	Lbs	[kg]
$^3/_8$ in.	2 $^9/_{32}$	58	2 $^1/_6$	52.5	$^1/_2$	13	3 $^{11}/_{16}$	93.5	1.3	0.6
$^1/_2$ in.	2 $^9/_{32}$	58	2 $^1/_6$	52.5	$^1/_2$	13	3 $^{11}/_{16}$	93.5	1.3	0.6
$^1/_4$ in.	3 $^{17}/_{32}$	90	2 $^9/_{32}$	58	$^{11}/_{16}$	18	3 $^{11}/_{16}$	93.5	1.8	0.8
1	3 $^{17}/_{32}$	90	2 $^9/_{32}$	58	$^{11}/_{16}$	23	4	100	2.4	1.1

© Danfoss A/S 02-2003

$^3/_8$ in. - 1 in.

Type EV250B NC
for neutral liquids and gases
DN 10 - 22 BD

De-energized
closed

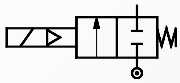

Function

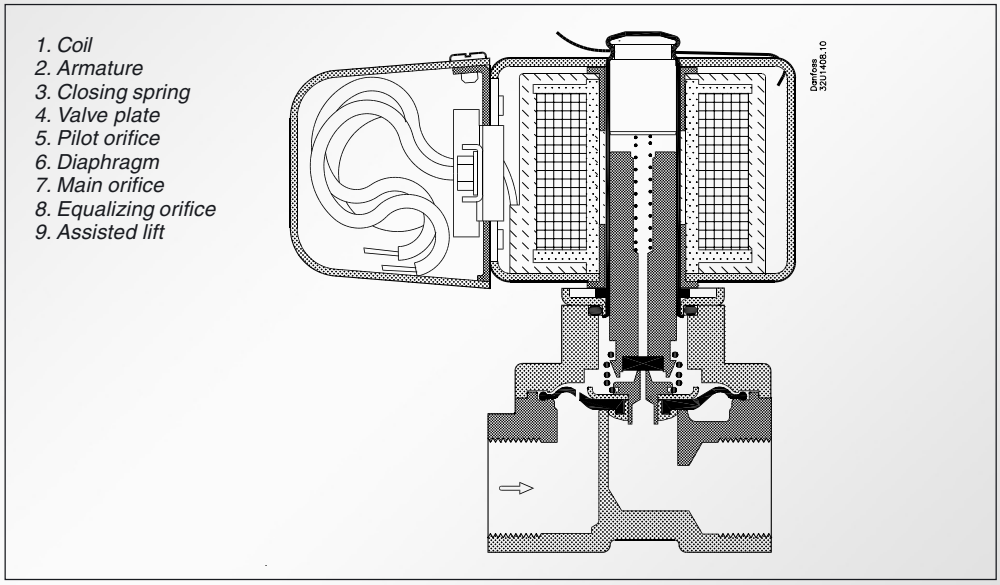

Coil voltage disconnected (closed):
When the supply voltage to the coil (1) is disconnected, the valve plate (4) is pressed down against the pilot orifice (5) by the closing spring (3). The pressure across the diaphragm (6) is built up via the equalizing orifice (8). The diaphragm closes the main orifice (7) as soon as the pressure across the diaphragm is equivalent to the inlet pressure below, due to the larger diameter of the upper side and/or the tension of the closing spring (3). The valve will be closed as long as the voltage to the coil is disconnected.

Coil voltage connected (open):
When voltage is applied to the coil, the armature (2) and the valve plate (4) are lifted clear of the pilot orifice (5). If there is a differential pressure across the valve, the pressure above the diaphragm (6) drops as the pilot orifice is larger than the equalizing orifice. Therefore the diaphragm is lifted clear of the main orifice (7). If there is no differential pressure across the valve, the armature (2) draws the diaphragm (6) clear of the main orifice (7) using the assisted lift (9). The valve will be open for as long as there is voltage to the coil.

Ordering - valve body

Connection NPT in.	Seal material	C_v value [Gal/min.]	Media temp. [1] Min. [°F]	Max. [°F]	Type designation: Main type	Type designation: Specification	Code no without coil	Permissible differential pressure (Psi): Min.	Permissible differential pressure (Psi): Max.
$^3/_8$	EPDM [2] FKM [3]	2.9	–22 +32	+284 [2] +212 [3]	EV250B 10BD EV250B 10BD	38E NC000 38F NC000	**032U5260** **032U5261**	0	145 145
$^1/_2$	EPDM [2] FKM [3]	4.6	–22 +32	+284 [2] +212 [3]	EV250B 12BD EV250B 12BD	12E NC000 12F NC000	**032U5262** **032U5263**	0	145 145
$^3/_4$	EPDM [2] FKM [3]	6.9	–22 +32	+284 [2] +212 [3]	EV250B 18BD EV250B 18BD	34E NC000 34F NC000	**032U5264** **032U5265**	0	145 145
1	EPDM [2] FKM [3]	8.1	–22 +32	+284 [2] +212 [3]	EV250B 22BD EV250B 22BD	1E NC000 1F NC000	**032U5266** **032U5267**	0	145 145

[1]) 18 W dc coil: Max. +194°F

[2]) EPDM is suitable for water and steam (see illustration to the right):
–22 - +248°F: 0 - 145 psi

[3]) FKM is suitable for oil, water and air 32°F - +212°F (water: Max. +140°F)

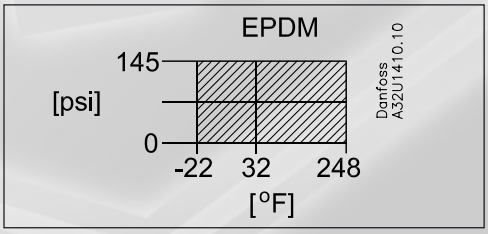

© Danfoss A/S 02-2003

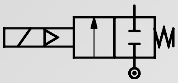

De-energized
closed

EV250B
For natural liquids and gases

$^{3}/_{8}$ in. - 1in.

Coils for valves

certified, - listed



- Class: General purpose, indoor
- Junction box c/w leads
- Voltage tolerance = +10% / –15%
- Ambient temperature:
  –40°F (–40°C) to 120°F (50°C)
- Power consumption: 17.5W

Voltage V	Frequency Hz	Cut-in VA	Holding VA	**Code Number**
24	50 / 60	76	40	**018Z7613**
110 / 120	50 / 60	76	45	**018Z7612**
208 / 204	50 / 60	76	45	**081Z7611**



- Class: Rainproof "NEMA 3R"
- ½" Conduit hub
- 18" leads
- Voltage tolerance = +10% / –15%
- Ambient temperature:
  –40°F (–40°C) to 120°F (50°C)
- Power consumption: 17.5W

Voltage V	Frequency Hz	Cut-in VA	Holding VA	**Code Number**
24	50 / 60	76	40	**018Z7623**
110 / 120	50 / 60	76	45	**018Z7622**
208 / 204	50 / 60	76	45	**081Z7621**

© Danfoss A/S 02-2003

$^{3}/_{8}$ in. - 1in.

Type EV250B NC
for neutral liquids and gases
DN 10 - 22 BD

De-energized
closed

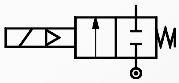

Spare parts kit for EV250B

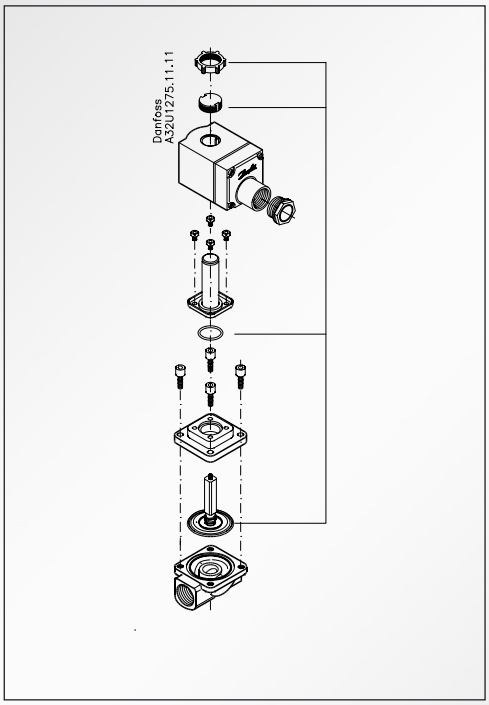

The spare parts kit comprises a locking button and nut for the coil, and a service element consisting of an armature with valve plate and spring fitted on the diaphragm.

For valve type	Seal material	**Code no.**
EV250B 10-12BD	EPDM [1])	**032U5270**
EV250B 10-12BD	FKM [2])	**032U5271**
EV250B 18-22BD	EPDM [1])	**032U5272**
EV250B 18-22BD	FKM [2])	**032U5273**

[1]) EPDM is suitable for water and steam:
–22 - +248°F: 0 - 145 psi

[2]) FKM is suitable for oil, water and air
32°F - +212°F(water: Max. +140°F)

© Danfoss A/S 02-2003

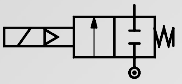

De-energized
closed

EV250B NC
For natural liquids and gases
DN 10 - 22 BD

$^{3}/_{8}$ in. - 1in.

Capacity diagram for solenoid valve type EV250B

Example
Capacity diagram for solenoid valve
EV 250B 12 B @ differential pressure of
43 psi approx. 30 gal/min

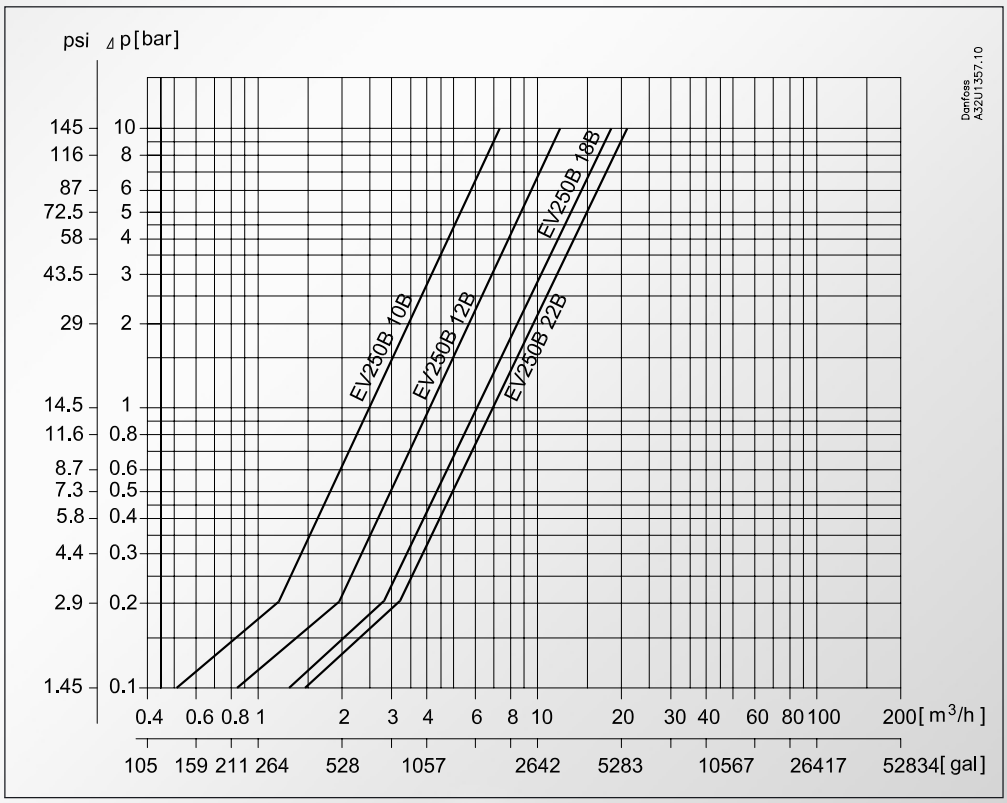

Water at higher pressure

Type EV250B

$^{3}/_{8}$ in. - 1in.

De-energized
closed

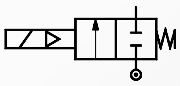

Danfoss can accept no responsibility for possible errors in catalogues, brochures and other printed material. Danfoss reserves the right to alter its products without notice. This also applies to products already on order provided that such alterations can be made without subsequential changes being necessary in specifications already agreed.
All trademarks in this material are property of the respective companies. Danfoss and the Danfoss logotype are trademarks of Danfoss A/S. All rights reserved.

DK-6000 Kolding
Denmark

© Danfoss A/S 02-2003